Ultrasonic Flow Meter User Manual

Type: CC-120A-TUF

Contents

1. Introduction 4
1.1 Preface 4
1.2 Features 4
1.3 Flow measurement principle 4
1.4 Optional transducer 5
1.5 Typical application 5
1.6 Product Identification 5
1.7 Specifications 6
2. Installation and Measurement 7
2.1 Wiring diagram 7
2.2 Keypad 7
2.3 Menu Windows 8
2.4 Steps to Configure the Parameters 9
2.5 Transducers Mounting Allocation 10
2.6 Transducers Installation 11
2.6.1 Wiring diagram of transducer 12
2.6.2 Transducers Spacing 12
2.6.3 V-method Installation 12
2.6.4 Z-method Installation 13
2.6.5 W-method Installation 13
2.6.6 N-method Installation 14
2.7 Installation Checkup 14
2.7.1 Signal Strength 14
2.7.2 Signal quality 15
2.7.3 Time Ratio between the Measured Total Transit Time and the Calculated Time 15
3. Menu Window Details 15
3.1 Menu Windows Arrangement 15
3.2 Menu Window Details 16
4. How To 26
4.1 How to judge if the instrument works properly 26
4.2 How to judge the liquid flowing direction 26
4.3 How to change between units systems 26
4.4 How to select a required flow rate unit 27
4.5 How to use the totalizer multiplier 27
4.6 How to open or shut the totalizers 27

4.7 How to reset the totalizers 27
4.8 How to restore the flow meter with default setups 27
4.9 How to use the damper 27
4.10 How to use the zero-cutoff function 28
4.11 How to setup a zero point 28
4.12 How to get a scale factor for calibration 28
4.13 How to use the system locker 28
4.14 How to use 4-20mA current loop output 28
4.15 How to use the Frequency Output 29
4.16 How to use the Totalizer Pulse Output 30
4.17 How to produce an alarm signal 30
4.18 How to use the built-in Buzzer 31
4.19 How to use the OCT output 31
4.20 How to modify the built-in calendar 31
4.21 How to view the Date Totalizers 31
4.22 How to use the Working Timer 32
4.23 How to use the manual totalizer 32
4.24 How to know how long the battery will last 32
4.25 How to check the ESN and other minor details 32
4.26 How to use the data logger for scheduled output 32
4.27 How to output analogue voltage signal 32
4.28 How to adjust the LCD display 33
4.29 How to use RS232/RS485? 33
4.30 How to use automatic amending function for offline compensation 33
4.31 How to use batch controller 33
4.32 How to adjust the analogue output 33
4.33 How to solidify the parameters 34
4.34 How to enter the parameters of user-type-transducer 34
4.35 How to use the circular display function 34
4.36 How to enter into the linearity correcting? How to enter into the data? 34
4.37 How to save / restore frequently-used pipe parameters 35
5. Troubleshooting 35
5.1 Power-on Error Displays and Counter-Measures 35
5.2 Error Code and Counter-Measures 36
5.3 Other Problems and Solutions 37

1. Introduction

1.1 Preface

Welcome to use new generation transit-time ultrasonic flow meter, please read the user manual carefully before using. The wall-mount ultrasonic flow meter is designed to be installed in a fixed location for long-term flow measurement.

1.2 Features

- Linearity: 0.5%, Repeatability: 0.2%, Accuracy:±1%
- Easy to operate.
- Several type transducers for selection, measuring pipe size is from DN15mm to DN6000mm
- Adopt low voltage, multi-pulse technology to improve accuracy, useful life and reliability.
- Powerful Recording Function, record the totalizer data of the last 64 days/64 monthes/5 years.

1.3 Flow measurement principle

The CC-120A-TUF ultrasonic flow meter is designed to measure the fluid velocity of liquid within a closed conduit. The transducers are a non-contacting, clamp-on type, which will provide benefits of non-fouling operation and easy installation.

The CC-120A-TUF transit-time flow meter utilizes two transducers that function as both ultrasonic transmitters and receivers. The transducers are clamped on the outside of a closed pipe at a specific distance from each other. The transducers can be mounted in V-method where the sound transverses the pipe twice, or W-method where the sound transverses the pipe four times, or in Z-method where the transducers are mounted on opposite sides of the pipe and the sound crosses the pipe once. This selection of the mounting method depends on pipe and liquid characteristics. The flow meter operates by alternately transmitting and receiving a frequency modulated burst of sound energy between the two transducers and measuring the transit time that it takes for sound to travel between the two transducers. The difference in the transit time measured is directly and exactly related to the velocity of the liquid in the pipe, show as follows:

$$V = \frac{MD}{\sin 2\theta} \times \frac{\Delta T}{T_{up} \bullet T_{down}}$$

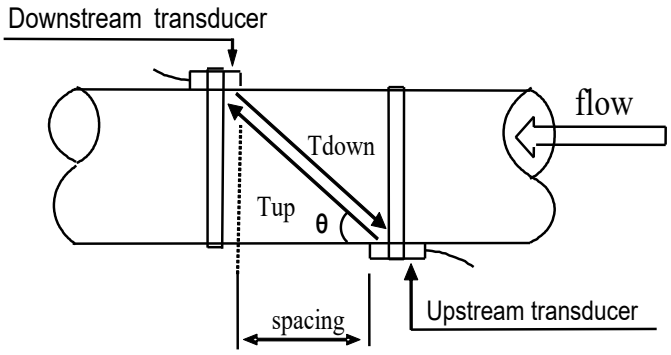

Where

θ is the include angle to the flow direction

M is the travel times of the ultrasonic beam

D is the pipe diameter

Tup is the time for the beam from upstream transducer to the downstream one

Tdown is the time for the beam from downstream transducer to the upstream one

ΔT=Tup –Tdown

1.4 Optional transducer

- **TS-1** clamp-on type transducer, pipe size from DN15-100mm
- **TM-1** clamp-on type transducer, pipe size from DN50-1000mm
- **TL-1** clamp-on type transducer, pipe size from DN300-6000mm
- **HTS-1** clamp-on type transducer, pipe size from DN15-100mm
- **HTM-1** clamp-on type transducer, pipe size from DN50-1000mm

1.5 Typical application

The wall-mounting flow meter can be applied to a wide range of pipe flow measurements. Applicable liquids include pure liquids as well as liquid with small quantity of tiny particles.

Examples are:

★ Water (hot water, chilled water, city water, sea water, waste water, etc.);
★ Sewage with small particle content;
★ Oil (crude oil, lubricating oil, diesel oil, fuel oil, etc.);
★ Chemicals (alcohol, acids, etc.);
★ Plant effluent;
★ Beverage, liquid food;
★ Ultra-pure liquids;
★ Solvents and other liquids

1.6 Product Identification

Each set of the flow meter has a unique product identification number or ESN (electronic serial number) written into the software that can only be modified with a special tool by the manufacturer. In case of any hardware failure, please provide this number which is located on menu window **M61** when contacting the manufacturer.

1.7 Specifications

Items		Specifications
Main unit	Accuracy	Better than ±1%
	Repeatability	Better than 0.2%
	Principle	Transit-time measuring principle
	Measurement Period	500ms
	Display	LCD with backlight, display accumulated flow/heat, instantaneous flow/heat, velocity, time etc.
	Output	Analogue output: 4-20mA or 0-20mA current output. Impedance 0~1kΩ. Accuracy 0.1%.
		OCT output: Frequency signal (1~9999HZ)
		Relay output: over 20 source signal (no signal, reverse flow etc.)
		RS485 serial port
	Input	Three analogue input
		Three-wire PT100 resistor input (optional)
	Other functions	Automatically record the totaliser data of the last 64 days / 64 months / 5 years; The power-on time and corresponding flow rate of the last 64 power on and off events. Allow manual or automatic flow loss compensation The instrument working status of the last 64 days
pipe	material	Steel, stainless steel, cast iron, cement pipe, copper, PVC, aluminum, FRP etc. Liner is allowed
	Size	15-6000mm
	Straight pipe section	In the upstream it must be beyond 10D, in the downstream it must be beyond 5D, in the upstream the length must be beyond 30D from the access of the pump. (D stands for pipe diameter)
Liquid	Types	Water, sea water, industrial sewage, acid & alkali liquid, alcohol, beer, all kinds of oils which can transmit ultrasonic single uniform liquid
	Temperature	Standard: -30˚C - 90˚C ， High-temperature：-30˚C - 160˚C
	Turbidity	Less than 10000ppm, with a little bubble
	Flow Direction	Bi-directional measuring, net flow/heat measuring
Environment	Temperature	Main Unit: -30˚C - 80˚C
		Transducer: -40 ℃ -110 ℃ , Temperature transducer: select on enquiry
	Humidity	Main Unit: 85% RH
		Transducer: water-immersible, water depth less than 3m
Cable	Twisted Pair Line, standard length of 20m, can be extended to 500m (not recommended); Contact the manufacturer for longer cable requirement. RS-485 interface, transmission distance up to 1000m	
Power Supply	AC220V or DC24V	
Power Consumption	Less than 1.5W	
Protocols	MODBUS, M-BUS, Fuji extended protocol and other factory protocol	

2. Installation and Measurement

2.1 Wiring diagram

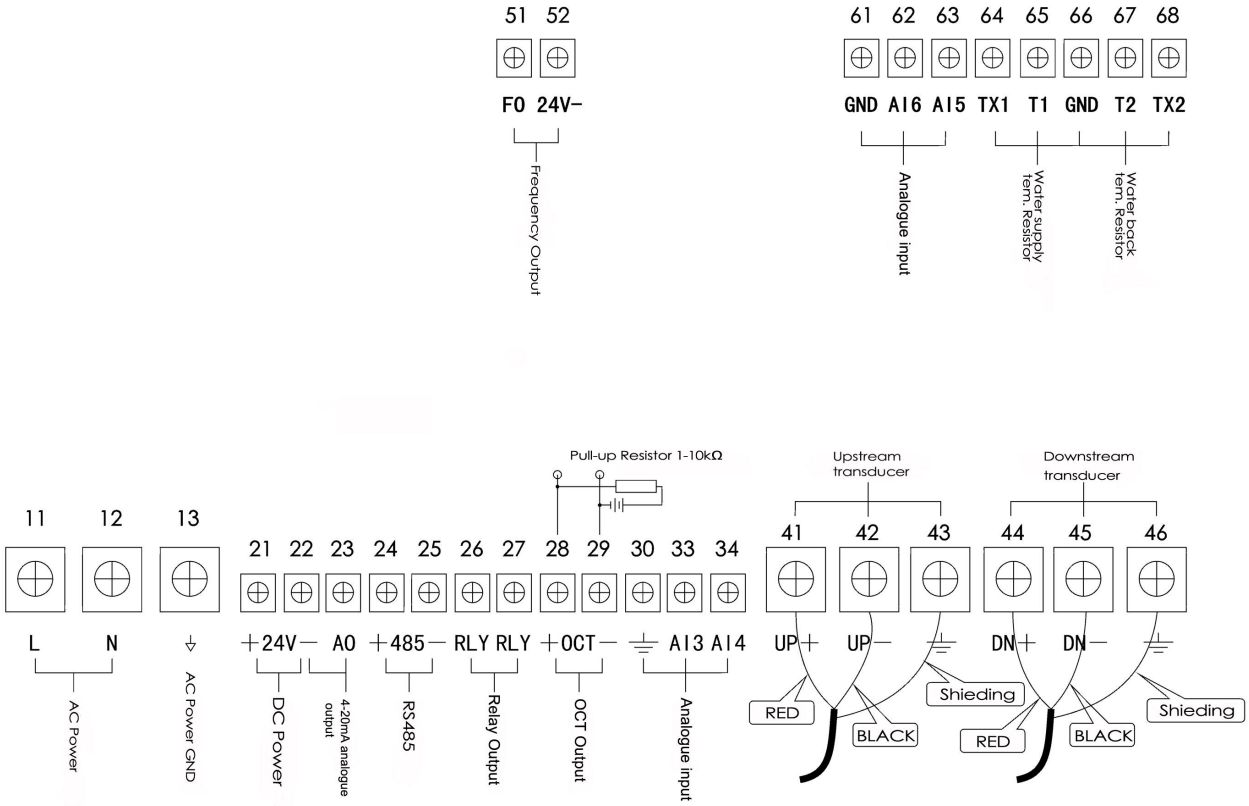

2.2 Keypad

The keypad for the operation of the flow meter is as shown by the right picture.

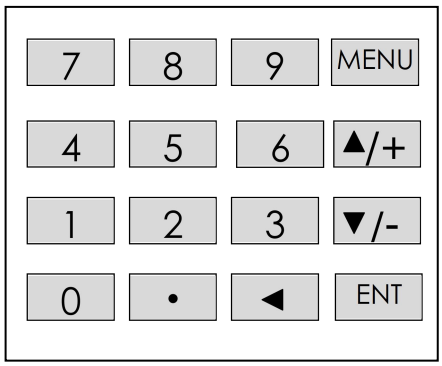

Keys 0 - 9 and . are keys to enter numbers

Key ▲/+ is the going UP key, when the user wants to go to the upper menu window. It also works as the "+" key when entering numbers

Key ▼/- is the going DOWN key, when the user wants to go down-sided menu window. It also works as the "–" key when entering numbers.

Key ◄ is backspace key, when the user wants go left or wants backspace the left character that is located to the left of the cursor.
Key ENT is the ENTER key for any inputting or selections.
Key MENU is the key for the direct menu window jump over. Whenever the user wants to proceed to a certain menu window, the user can press this key followed by 2-digit numbers.
The MENU key is shortened as the 'M' key afterward when referring to the menu windows.

The ON key is for the power on.
The OFF key is for the power off.

2.3 Menu Windows

The user interface of this flow meter comprises about 100 different menu windows that are numbered by M00, M01, M02 … M99.

There are 2 methods to enter certain menu window:
1. Direct going/entering. The user can press the MENU key followed by two-digit number keys. For example, the menu window M11 is for the entering of pipe outer diameter. The display will go to the M11 menu window after the user presses MENU 1 1 .
2. Pressing ▲/+ and ▼/- keys. Each time of the ▲/+ key pressing will proceed to the lower-numbered menu window. For example, if the current window is on M12, the display will go to the number M11 window after pressing the ▲/+ key.

There are three different types of menu windows:
1. Menu windows for number entering, like M11 for the entering of pipe outer diameter.
2. Menu windows for option selection/selecting options, like M14 for the selection of pipe materials.
3. Displaying windows only, like M00 to display Velocity, Flow Rate etc.

For number entering windows, the user can directly press the starting digit key when the user is going to modify the value. For example, when the current window is on M11, and the user is going to enter 219.2345 as the pipe outer diameter, the user can get the numbers entered by pressing the following serial keys: 2 1 9 . 2 3 4 5 ENT.

For the option selection windows, the user should first press the ENT key to a selection modification mode and then select the relevant options by pressing the ▲/+ and ▼/- keys or the digit keys to select the option with a number antecedent to the option. In the end, the ENT key must be pressed to make the selection. For example, with menu window M14 for the selection of pipe material selection, (the MENU 1 4 should be pressed first to enter this menu window if the current menu window is on a different window. The pipe material is stainless steel which has a number "1" antecedent to "stainless steel" on the display, the user should first press the ENT key to enter into a selection modification mode, then either make the selection by pressing the ▲/+ and ▼/- keys to make the cursor on the line that displays "1. Stainless Steel", or make the selection by pressing the 1 key directly.

Generally, the ENT key must be pressed to enter a modification mode. If the "Locked M47 Open'

message is indicated on the lowest line of the LCD display, it means the modification operations is locked out. In such cases, the user should go to M47 to have the instrument unlocked first before any further modification can be made.

2.4 Steps to Configure the Parameters

The following parameters need to be configured for a proper measurement:

(1) Pipe outer diameter
(2) Pipe wall thickness
(3) Pipe materials (for non-standard pipe materials*, the sound speed for the material must be configured too)
*Standard pipe materials and standard liquids refer to those with the sound parameters that have already been programmed into software of the flow meter, therefore there is no need to configure them
(4) Liner material and its sound speed and thickness, if there is any liner.
(5) Liquid type (for non-standard liquids, the sound speed of the liquid is also needed)
(6) Transducer type adapted to the flow meter. Generally the Standard M1 clamp-on transducers will be the selected option.
(7) Transducer mounting methods (the V-method or Z-method is the common option)
(8) Check up the Space displayed on M25 and install the transducers accordingly.
(9) Store the parameter setup

For standard pipe materials and standard liquids, the following detailed step-by-step setup is recommended.

(1) Press keys MENU 1 1 to enter M11 window to input the digits for the pipe outer diameter, and then press ENT key.
(2) Press key ▼/- to enter M12 window to input the digits for the pipe outer diameter and then press ENT key.
(3) Press key ▼/- to enter M14 window, and press ENT key to enter the option selection mode. Use keys ▲/+ and ▼/- to scroll up and down to the intended pipe material, and then press ENT key.
(4) Press key ▼/- to enter M16 window, press ENT key to enter the option selection mode, use keys ▲/+ and ▼/- to scroll up and down to the liner material, and then press ENT key. Select “No Liner”, if there is no liner.
(5) Press key ▼/- to enter M18 window, press ENT key to enter the liner thickness and then press ENT key (if there is liner)
(6) Press key ▼/- to enter M20 window, press ENT key to enter the option selection mode, use keys ▲/+ and ▼/- to scroll up and down to the proper liquid, and then press ENT key.
(7) Press key ▼/- to enter M23 window, press ENT key to enter the option selection mode, use keys ▲/+ and ▼/- to scroll up and down to the proper transducer type, and then press ENT key.
(8) Press key ▼/- to enter M24 window, press ENT key to enter the option selection mode, use keys ▲/+ and ▼/- to scroll up and down to the proper transducer mounting method, and then press ENT key.
(9) Press key ▼/- to enter M25 window and check up the installation space.
(10) Press MENU 2 6 to store the parameter setup (refer to M26)

(11) Press MENU 9 0 to check up signal strength and quality, the bigger of the value the better. Generally the signal strength should be better than 60.0, and signal quality should be better than 50.0.
(12) Press MENU 9 1 to check up time ratio, the ratio value should be in the range of 100±3%
(13) Press MENU 0 8 to check up the working status, “R” means work well
(14) Press MENU 0 1 to check up the measuring data.

Note: 1. For heat measurement, please connect PT100 which installed in water supply and water back pipe to T1, TX1, T2, TX2, GND terminal.
2. After setting parameter, remember to store parameter in MENU 26, to avoid parameter lose after turn off.

2.5 Transducers Mounting Allocation

The first step in the installation process is the selection of an optimum location in order to obtain a more accurate measurement. For this to be completed effectively, a basic knowledge about the piping and its plumbing system would be advisable.

An optimum location would be defined as a straight pipe length full of liquid that is to be measured. The piping can be in vertical or horizontal position. The following table shows

Piping Configuration and Transducer Position	Upstream Dimension L up x Diameters	Downstream Dimension L dn x Diameters
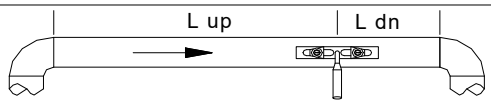	10D	5D
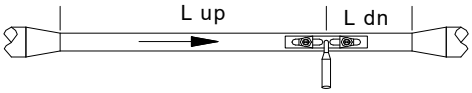	10D	5D
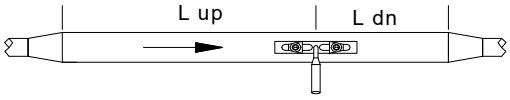	10D	5D
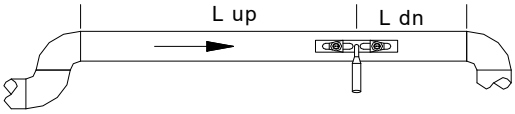	12D	5D
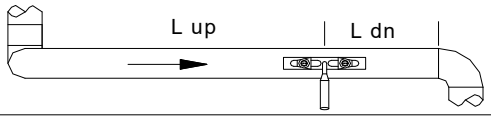	20D	5D
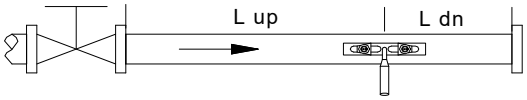	20D	5D
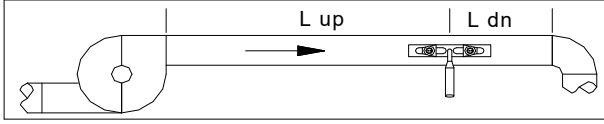	30D	5D

Examples of optimum locations.

Principles to selection of an optimum location

(1) Install the transducers on a longer length of the straight pipe. The longer the better, and make sure that the pipe is completely full of liquid.
(2) Make sure that the temperature on the location does not exceed the range for the transducers. Generally speaking, the closer to the room temperature, the better.
(3) Take the pipe fouling into consideration. Select a straight length of a relatively newer pipe. If the condition is not satisfying, consider the fouling thickness as part of the liner for a better result.

(4) Some pipes have a kind of plastic liner, and between the outer pipe and the liner there may be a certain thickness difference that will prevent the ultrasonic waves from direct traveling. Such conditions will make the measurement very difficult. Whenever possible, try to avoid this kind of pipes. If impossible, try our plug-in transducers that are installed permanently on the pipe by drilling holes on the pipe while liquid is running inside.

2.6 Transducers Installation

The transducers used by the TUF-2000 series ultrasonic flow meter are made of piezoelectric crystals both for transmitting and receiving ultrasonic signals through the wall of liquid piping system. The measurement is realized by measuring the traveling time difference of the ultrasonic signals. Since the difference is very small, the spacing and the alignment of the transducers are critical factors to the accuracy of the measurement and the performance of the system. Meticulous care should be taken for the installation of the transducers.

Steps to the installation of the transducers

(1) Locate an optimum position where the straight pipe length is sufficient, and where pipes are in a favorable condition, e.g., newer pipes with no rust and ease of operation.
(2) Clean any dust and rust. For a better result, polishing the pipe with a sander is strongly recommended.
(3) Apply adequate coupler to the spot where the transducers are to be installed and leave no gap between the pipe surface and the transducers.

Extra care should be taken to avoid any sand or dust particles left between the pipe outer surface and the transducers.

To avoid gas bubbles inside the upper part of the pipe, the transducers should be installed horizontally by the side of the pipe.

2.6.1 Wiring diagram of transducer

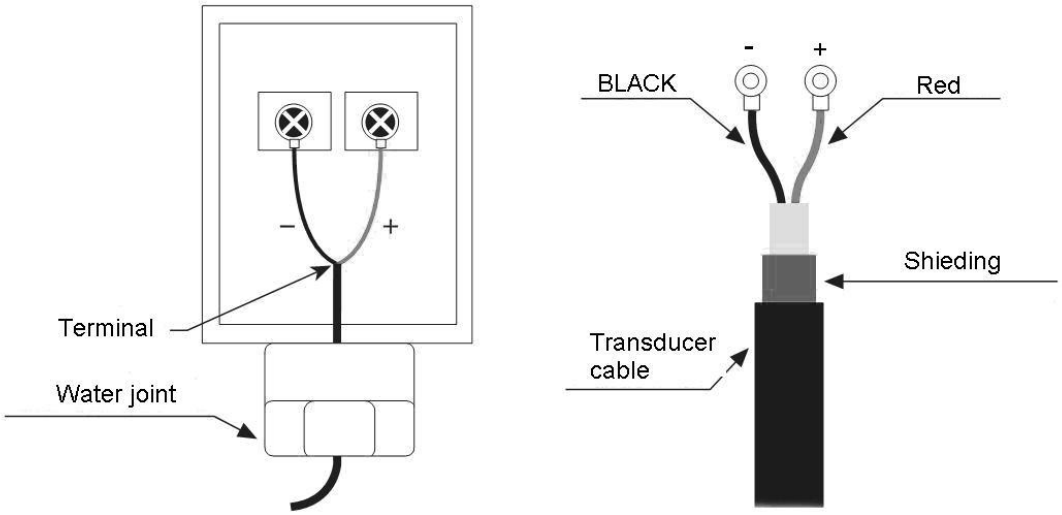

2.6.2 Transducers Spacing

The spacing value shown on menu window M25 refers to the distance of inner spacing between the two transducers. The actual transducers spacing should be as close as possible to the spacing value.

2.6.3 V-method Installation

V-method installation is the most widely mode for daily measurement with pipe inner diameters ranging from 15 mm to 200 mm. It is also called reflective mode.

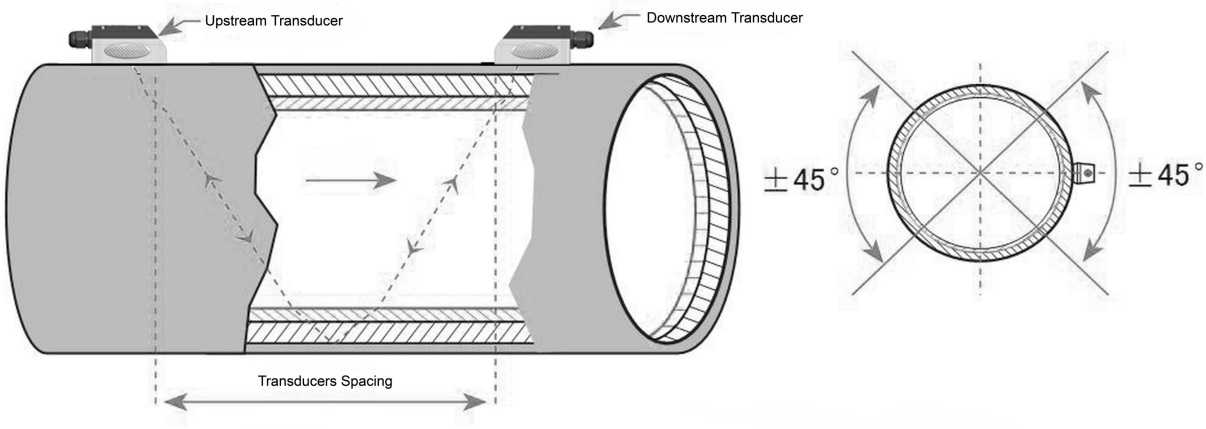

2.6.4 Z-method Installation

Z-method is commonly used when the pipe diameter is above 200mm.

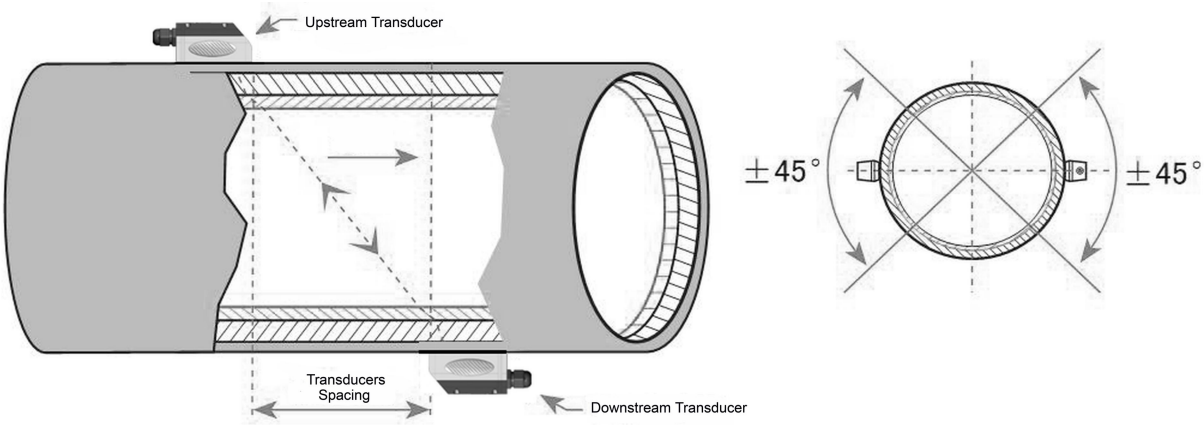

2.6.5 W-method Installation

W-method is usually used on pipes with a diameter from 15mm to 50mm.

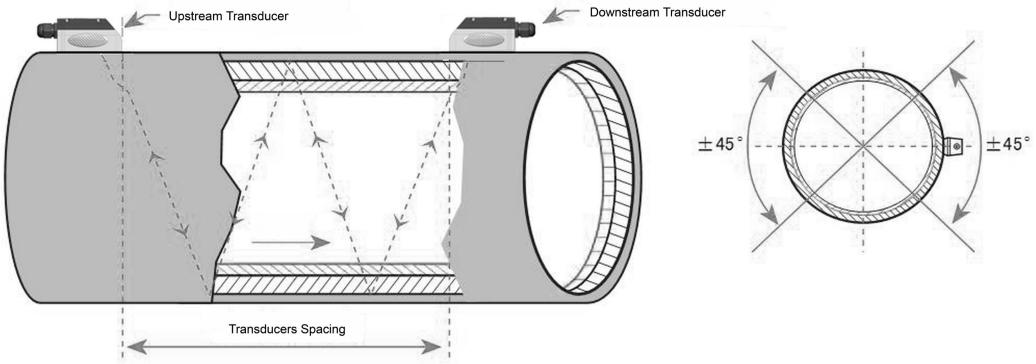

2.6.6 N-method Installation

Rarely used method.

2.7 Installation Checkup

Through the checkup of the installation, one can: check the receiving signal strength, the signal quality Q value, the traveling time difference of the signals, the estimated liquid speed, the measured traveling time of the signals and the calculated traveling time ratio. Therefore, optimum measurement result and longer running time of the instrument can be achieved.

2.7.1 Signal Strength

Signal strength indicates the amplitude of receiving ultrasonic signals by a 3-digit number. [00.0] means there is no signal detected and [99.9] refers to the maximum signal strength that can be received.

Although the instrument works well if the signal strength ranges from 50.0 to 99.9, stronger signal strength should be pursued, because a stronger signal means a better result. The following methods are recommended to obtain stronger signals:

(1) Relocate a more favorable location, if the current location is not good enough for a stable and reliable flow reading, or if the signal strength is lower than 60.0.
(2) Try to polish the outer surface of the pipe, and apply more coupler to increase the signal strength.
(3) Adjust the transducers both vertically and horizontally while checking the varying signal strength, stop at the highest position, and then check the transducers spacing to make sure the transducers spacing is the same as what the M25 shows.

2.7.2 Signal quality

Signal quality is indicated as the Q value in the instrument. A higher Q value would mean a higher Signal and Noise Ratio (short for SNR), and accordingly a higher degree of accuracy would be achieved. Under normal pipe condition, the Q value is in the range 60.0-90.0, the higher the better.

Causes for a lower Q value could be:

(1) Interference of other instruments and devices such as a powerful transverter working nearby. Try to relocate the flow meter to a new place where the interference can be reduced.
(2) Bad sonic coupling for the transducers with the pipe. Try to apply more coupler or clean the surface, etc.
(3) Pipes are difficult to be measured. Relocation is recommended.

2.7.3 Time Ratio between the Measured Total Transit Time and the Calculated Time

This ratio would be used to check the transducer installation. If the pipe parameters are entered correctly and the transducers are installed properly, the value for this ratio should be in the range of 100±3. If this range is exceeded, the user should check:

(1) If the pipe parameters are correctly entered.
(2) If the actual spacing of the transducers is right and the same as what the window M25 shows.
(3) If the transducers are installed properly in the right directions.
(4) If the mounting location is good and if the pipe has changed shape or if there is too much fouling inside the pipes
(5) Other poor condition

3. Menu Window Details

3.1 Menu Windows Arrangement

M00~M09 windows for the display of the flow rate, velocity, date time, totalizers, battery voltage and estimated working hours for the battery.
M10~M29 windows for entering the pipe parameter.
M30~M38 windows for flow rate unit selections and totalizer unit selections.
M40~M49 windows for response time, zeroing, calibration and modification password setup.
M50~M53 windows for the built-in logger

M60-M78 windows for time-keeper initialization, version and ESN information viewing and alarms.

M82 window for viewing date totalizer.

M90~M94 are diagnostic windows for a more accurate measurement.

M97~M99 are not windows but commands for the outputting of display copying and pipe parameter setups.

M+0~M+8 are windows for some additional functions, including a scientific calculator, viewer on records such as total working hours, turn-on and turn-off times, dates and times when the flow meter has been turned on or turned off.

Other menu windows such as M88 have no functions, or functions were cancelled because they are not applied to this version of the software.

The major reason why the menu windows are arranged in this way is that the software programmer hopes that the menu window arrangement for this version can be compatibility with the previous versions of the flow meter software. This will make it easier for the former version users with this flow meter series.

3.2 Menu Window Details

Menu window No.	Function
M00	Display flow rate and NET totalizer If the net totalizer is turned off, the net totalizer value shown on the screen is the value prior to its turn off Select all totalizer unit in menu M31
M01	Display flow rate, velocity
M02	Display date time and POS(positive) totalizer If the positive totalizer is turned off, the positive totalizer value shown on the screen is the value prior to its turn off
M03	Display flow rate and NEG(negative) totalizer If the negative totalizer is turned off, the negative totalizer value shown on the screen is the value prior to its turn off
M04	Display date and time, flow rate. The date and time setting method is found in MENU60
M05	Display energy rate(instantaneous Caloric)and total energy (Caloric)
M06	Display temperatures, inlet T1, outlet T2
M07	Display analog inputs, AI3/AI4, current value and its corresponding temperature or pressure or liquid level value
M08	Display all the detailed error codes Display working condition and system error codes. ‘R’ stands for normal; others refer to Chapter 5 for details.
M09	Display today’s total NET flow
M10	Window for entering the outer perimeter of the pipe If pipe outer diameter is known, skip this menu and go to Menu 11to enter the outer diameter
M11	Window for entering the outer diameter of the pipe. Valid range:0 to 18000mm.

	Note: you just need to enter either the outer diameter in M11 or the peripheral in M10
M12	Window for entering pipe wall thickness You may skip the menu and enter inner diameter in M13 instead.
M13	Window for entering the inner diameter of the pipe If pipe outer diameter and wall thickness are enter correctly, the inner diameter will be calculated automatically, thus no need to change anything in the window
M14	Window for selecting pipe material Standard pipe materials (no need to enter material sound speed) include: (0) carbon steel (1) stainless steel (2) cast iron (3) ductile iron (4) copper (5) PVC (6) aluminum (7) asbestos (8) fiberglass (9) other(need to enter material sound speed in M15)
M15	Window for entering the pipe material speed, only for non-standard pipe materials
M16	Window for selecting the liner material, select none for pipes without any liner. Standard liner materials(no need to enter the liner sound speed) include: (1) Tar Epoxy (2) Rubber (3) Mortar (4) Polypropylene (5) Polystryol (6)Polystyrene (7) Polyester (8) Polyethylene (9) Ebonite (10) Teflon (11) Other (need to enter liner sound speed in M17)
M17	Window for entering the non-standard liner material speed.
M18	Window for entering the liner thickness, if there is a liner
M19	Window for entering the ABS thickness of the inside wall of the pipe
M20	Window for selecting fluid type For standard liquids(no need to enter fluid sound speed) include: (0) Water (1) Sea Water (2) Kerosene (3) Gasoline (4) Fuel oil (5) Crude Oil (6) Propane at -45C (7) Butane at 0C (8)Other liquids(need to enter sound speed in M21 and viscosity in M22) (9) Diesel Oil (10)Caster Oil (11)Peanut Oil (12) #90 Gasoline (13) #93 Gasoline (14) Alcohol (15) Hot water at 125C
M21	Window for entering the sound speed of non- standard liquid, used only when option item 8 'Other' is selected in M20
M22	Window for entering the viscosity of the non-standard liquids, used only when option item 8 'Other' is selected in M20
M23	Window for selecting transducer type, There are 22 types as following 0. Standard M (The middle size) 1. Insertion Type C 2. Standard S 3. User Type 4. Standard B 5. Insertion Type B(45) 6. Standrad L (The large size transducers) 7. JH-Polysonics 8. Standard-HS (small size transducer for Handheld flow meter)

	9. Standard-HM (middle size transducer for Handheld flow meter) 10. Standard-M1 (middle size transducer #1) 11. Standard-S1 (small size transducer #1) 12. Standard-L1 (large size transducer #1) 13. PI-Type 14. FS410 (middle size transducer for FUJI flow meter) 15. FS510 (large size transducer for FUJI flow meter) 16. Clamp-on TM-1 (Middle size transducer for Taosonics Instrument) 17. Insertion TC-1 (for Taosonic Instrument) 18. Calmp-on TS-1 (small size for Taosonics Instrument) 19. Reserved 20. Clamp-on TL-1 (For Taosonics Instrument) 21. Insertion TLC-2 (For Taosonics Instrument) If the user-type-transducer is selected, you need enter additional 4 user-type-wedge parameters that describe the user transducers. If the PI-type transducer is selected, you need enter additional 4 PI-type transducer parameters that describe the PI-type transducers
M24	Window for selecting the transducer mounting methods Four methods can be selected: (0) V-method (1) Z-method (2) N-method (3) W-method
M25	Display the transducer mounting spacing or distance
M26	(1) A switch for the parameters in flash memory will be loaded when power is turned on. The default option is that the parameters will be loaded. If this switch is not turned on, the system will try to use the parameters in the system RAM, if these parameters are ok, otherwise the system will load the parameters in flash memory (2) Function to store the current parameters into the flash memory, so that these parameters will be solidified and will be loaded as the default parameters every time when power is turned on.
M27	Entry to store to or restore from the internal Flash memory, as many as 9 different pipe parameter configurations To save or load the current setup parameter, use the going up or going down keys to change the address number, press 'ENT' key, and use going down or going up keys to select to save to or load from the memory.
M28	Entry to determine whether or not to hold (or to keep) the last good value when poor signal condition occurs. YES is the default setup.
M29	Entry to setup empty signal threshold. When the signal is less than this threshold, the pipe is regarded as empty pipe, and the flow meter will not totalize flow. This is based on the fact that, for most occasions, when pipe is empty, the transducer would still receive signal, just smaller than normal, As a result, The flow meter would show normal operation, which is not correct. Make sure that the entered value must be less than the normal signal strength. When much noisy signals are received, to make sure the flow meter will not incorrectly totalize flow, there is also a 'Q' threshold should be entered in M.5
M30	Window for selecting unit system. The conversion English to Metric or vice versa will not affect the unit for totalizers.
M31	Window for selecting flow rate unit system.

	Flow rate can be in 0. Cubic meter short for (m^3) 1. Liter (l) 2. USA gallon (gal) 3. Imperial Gallon (igl) 4. Million USA gallon (mgl) 5. Cubic feet (cf) 6. USA liquid barrel (bal) 7. Oil barrel (ob) The flow unit in terms of time can be per day, per hour, per minute or per second. So there are 32 different flow rate units in total for selection.
M32	Window for selecting the totalizers unit. Available units are the same as those in M31
M33	Window for setting the totalizer multiplying factor The multiplying factor ranges from 0.001 to 10000. Factory default is 1
M34	Turn on or turn off the NET totalizer
M35	Turn on or turn off the POS (positive) totalizer
M36	Turn on or turn off the NEG(negative) totalizer
M37	(1) Totalizer reset (2) Restore the factory default settings parameters. Press the dot key followed by the backspace key. Attention, It is recommended to make note on the parameters before doing the restoration
M38	Manual totalizer used for easier calibration. Press a key to start and press a key to stop the manual totalizer.
M39	Interface Language selection. The selection could also be changed automatically by the system, if English LCD display is used as the display device.
M3.	Setup for local segmental LCD display. Enter 0 or 1 for the non-auto-scan mode; Enter 2~39 for the auto-scan mode. In the auto-scan mode the display will automatically scan displaying from 00 to the entered number of the local segmental LCD display.
M40	Flow rate damper for a stable value. The damping parameter ranges form 0 to 999 seconds. 0 means there is no damping. Factory default is 10 seconds
M41	Low flow rate (or zero flow rate) cut-off to avoid invalid accumulation.
M42	Zero calibration/Zero point setup. Make sure the liquid in the pipe is not running while doing the setup.
M43	Clear the zero point value, and restore the solidified zero point value.
M44	Set up a flow bias. Generally this value should be 0.
M45	Flow rate scale factor. The default value is ‘1’. Keep this value as ‘1’, when no calibration has been made.
M46	Networks address identification number. Any integer can be entered except 13(0DH, carriage return), 10 (0AH, line feeding), 42 (2AH), 38, 65535. Every set of the instrument in a network environment should have a unique IDN. Please refer to the chapter for communication.
M47	System locker to avoid modification of the system parameters. If password is forgotten, you could send a command ‘LOCK0’ to the serial input to unlock. Or you can write 0 to REGISTER49-50 under MODBUS protocol.

M48	Entry to linearity correcting data inputs. By using of this function, the non-linearity of flow meter will be corrected. Correcting data shall be obtained by careful calibration.
M49	Displays the input contents for the serial port. By checking the displays, you can know if the communication is ok.
M50	Switches for the built-in data logger. There are as many as 22 different items can be chosen. To turn this function, select 'YES' the system will ask for selecting the items. There are 22 items available. Turn on all those items you want to output
M51	Window to setup the time of scheduled output function (data logger, or Thermo-printer). This includes start time, time interval and how many times of output. When a number great than 8000 entered for the times of output, It means the output will be keeping always. The minimum time interval is 1 second and the maximum is 24 hours.
M52	Data logging direction control. (1) If 'Send to RS485' is selected, all the data produced by the data logger will be transmitted out through the RS-232/RS485 interface (2) If 'To the internal serial BUS is selected, the data will be transmitted to the internal serial bus which allows a thermal printer, or a 4-20mA analog output module, to be connected to it.
M53	Display analog inputs, AI5, current value and its corresponding temperature or pressure or liquid level value.
M54	Pulse width setup for the OCT (OCT1) output. Minimum is 6 mS, maximum is 1000 mS
M55	Select analog output (4-20mA current loop, or CL) mode. Available options: (0) 4-20mA output mode (setup the output range from 4-20mA) (1) 0-20mA output mode (setup the output range from 4-20mA, This mode can only be used with Version-15 flow meter) (2) Serial port controls 0-20mA (3) 4-20mA corresponding fluid sound speed (4) 20-4-20mA mode (5) 0-4-20mA mode (can only be used with Version-15 flow meter) (6)20-0-20mA mode(can only be used with Version-15 flow meter) (7) 4-20mA corresponding flow velocity (8)4-20mA corresponding heat flow rate
M56	4mA or 0mA output value, Set the value which corresponds to 4mA or 0mA output current (4mA or 0mA is determined by the setting in M55)
M57	20mA output value, Set the value which corresponds to 20mA output current
M58	Current loop verification Check if the current loop is calibrated correctly.
M59	Display the present output current of current loop circuit.
M60	Setup system date and time. Press ENT for modification. Use the dot key to skip the digits that need no modification.
M61	Display Version information and Electronic Serial Number (ESN) that is unique for each flow meter. The users may employ the ESN for instrumentation management
M62	RS-232/RS485 setup. All the devices connected with flow meter should have matched serial configuration.

	The following parameters can be configured: Baud rate (300 to 19200 bps), parity, data bits (always is 8), stop bits (1).
M63	Select communication protocol. Factory default is 'MODBUS ASCII. this is a mode for MODBUS-ASCII, Meter-BUS, Fuji Extended Protocol, Huizhong's various protocols. If you are going using MODBUS-RTU you have to select 'MODBUS_RTU'.
M64	AI3 value range. Used to enter temperature/pressure values that are corresponding to 4mA and 20mA input current. The display values have no unit, so that they can present any physical parameter.
M65	AI4 value range. Used to enter temperature/pressure values that are corresponding to 4mA and 20mA input current.
M66	AI5 value range. Used to enter temperature/pressure values that are corresponding to 4mA and 20mA input current.
M67	Windows to setup the frequency range (lower and upper limit) for the frequency output function. Valid range is 0Hz-9999Hz. Factory default value is 0-1000 Hz. For Version-12, Version-13, Version-14 flow meters, you need a hardware module, which shall be plugged to the Serial Expanding Bus, for the frequency output function. Please remember to order the module if you need frequency output function. For Version-15 flow meter, you need to indicate on your orders that you need the frequency function; Otherwise you will get a flow meter which has no frequency output circuits.
M68	Window to setup the minimum flow rate value which corresponds to the lower frequency limit of the frequency output.
M69	Windows to setup the maximum flow Rate value that corresponds to the upper frequency limit of the frequency output.
M70	LCD display backlight control. The entered value indicates how many seconds the backlight will be on with every key pressing. If the enter value is great than 50000 seconds, It means that the backlight will always keeping on.
M71	LCD contrast control. The LCD will become darker or brighter when a value is entered.
M72	Working timer. It can be cleared by pressing ENT key, and then select YES.
M73	Window to setup the lower limit of flow rate for Alarm#1. When the flow rate is below the set value, Alarm#1 equals 'on'
M74	Window to setup the upper limit of flow rate for Alarm#1. When the flow rate is above the set value, Alarm#1 equals 'on' There are two alarms in the flow meter, and every alarm can be pointed to alarm output devices such as the BUZZER or OCT output or RELAY output. For example, if you want the Alarm#1 is to output by the OCT circuit, you need to set M78 at selection item 6.
M75	Window to setup the lower limit of flow rate for Alarm#2.
M76	Window to setup the upper limit of flow rate for Alarm#2.
M77	Buzzer setup. If a proper input source is selected, the buzzer will beep when the trigger event occurs. The available trigger sources are: 0. No Signal 1. Poor Signal

	2. Not Ready (No*R) 3. Reverse Flow 4. AO Over 100% 5. FO Over 120% 6. Alarm #1 7. Reverse Alarm #2 8. Batch Control 9. POS Int Pulse 10.NEG Int Pulse 11.NET Int Pulse 12.Energy POS Pulse 13.Energy NEG Pulse 14.Energy NET Pulse 15.MediaVel=>Thresh 16.MediaVelo<Thresh 17.ON/OFF viaRS232 18.Daily Timer (M51) 19.Timed alarm #1 20. Timed alarm #2 21.Batch Totalizer Full 22. M51 Timer 23. Key Stroking ON 24.Disable BEEPER
M78	OCT (Open Collect Transistor Output)/OCT1 setup By selecting a proper input source, the OCT circuit will close when the trigger event occurs. The available trigger sources are: 0. No Signal 1. Poor Signal 2. Not Ready(No*R) 3. Reverse Flow 4. AO Over 100% 5. FO Over 120% 6. Alarm #1 7. Reverse Alarm #2 8. Batch Control 9. POS Int Pulse 10.NEG Int Pulse 11.NET Int Pulse 12.Energy POS Pulse 13.Energy NEG Pulse 14.Energy NET Pulse 15.MediaVel=>Thresh 16.MediaVelo<Thresh 17.ON/OFF viaRS232 18. Daily Timer (M51) 19.Timed alarm #1 20. Timed alarm #2 21.Batch Totalizer Full 22. Periodically M51 Timer 23. Oct Not Using The OCT circuit does not source voltage at its output. It must be connected with an external power and pull-up resistant for some occasions. When the OCT circuit is close, it will draw current. The maximum current shall not be over 100mA. Attention: the maximum voltage applied to OCT can not be over 80 volts.
M79	Relay or OCT2 setup By selecting a proper input source, the RELAY will close when the trigger event occurs The available trigger sources are: 0. No Signal 1. Poor Signal 2. Not Ready(No*R) 3. Reverse Flow 4. AO Over 100% 5. FO Over 120% 6. Alarm #1 7. Reverse Alarm #2 8. Batch Control 9. POS Int Pulse 10.NEG Int Pulse 11.NET Int Pulse 12.Energy POS Pulse 13.Energy NEG Pulse 14.Energy NET Pulse 15.MediaVel=>Thresh 16.MediaVelo<Thresh 17.ON/OFF viaRS232 18. Timer (M51 Daily) 19.Timed alarm #1 20. Timed alarm #2 21.Batch Totalizer Full 22. Periodically M51 Timer 23. Disable Relay The RELAY is of SPST(Single pole, single throw) type. It is rated for 110VAC max and have a current rating of 0.5A resistive load. It highly recommended that a salve relay to be utilized whenever a large resistive load or inductive load is to be controlled. Note. In order to make the user interface compatible with the former version7, the name RELAY was used other than OCT2, but in fact it is an OCT output.
M80	Window for selecting the trig signal for the built-in batch controller. Available trig

	sources: 0. Key input (press ENT key to start the batch controller) 1. Serial port 2. AI3 rising edge (when AI3 receives 2mA or more current) 3. AI3 falling edge (when AI3 stop receiving 2mA or more current) 4. AI4 rising edge (when AI3 receives 2mA or more current) 5. AI4 falling edge (when AI3 stop receiving 2mA or more current) 6. AI5 rising edge (when AI3 receives 2mA or more current) 7. AI5 falling edge (when AI3 stop receiving 2mA or more current) 8.Timer periodically (define the start time and interval time in M51) 9.Timer daily (define the start time and interval time in M51) For the input analog current signal, 0 mA indicates "0", 4mA or more indicates '1'. By selecting item #8, the batch totalizer can be started periodically by the internal timer located at Menu51. When the batch totalizer is full, a signal which indicate the batch is full can be direct to either the OCT or the RELAY terminals to stop the pump or other devices. By selecting item #9, the batch totalizer could act as totalizer witch runs for only a period of the day so that a alarm signal could be produced if the total flow during that time period is over a certain amount of. For example, if you want a alarm signal which stand for the total flow is over 100 cubic meters during the period of every day from 20:00 to 06:00, setups is like M51 start time =20:00:00 M51 interval =10:00:00 M51 log times =9999 (means always) M80 select item #9 M81 input 100 (Unit is defined in M30,M31,M32)
M81	The built-in batch controller Set the flow batch value(dose) The internal output of the batch controller can be directed either to the OCT or the RELAY output circuits. M81 and M80 should be used together to configure the batch controller. Note: Because the measuring period is 500mS, the flow for every dos should be keeping at 60 seconds long to get a 1% dose accuracy.
M82	View the daily, monthly and yearly flow totalizer and thermal energy totalizer value. The totalizer values and errors for the last 64 days, 32 last 32 months and last 2 years are stored in the RAM memory, To view them, use the 'ENT' and 'UP' 'Down' keys.
M83	Automatic Amending Function for automatic offline compensation. Select 'YES' to enable this function, select 'NO' to disable it. When the function is enabled, The flow meter will estimate the average flow uncounted (or 'lost') during the offline session and add the result to the totalizer. The estimation of the uncounted flow is made by computing the product of the offline time period and the average flow rate, which is the average of the flow rate before going offline and the one after going on line.
M84	Set the thermal energy unit: 0. GJ 1. KC 2.KWh 3. BTU
M85	Select temperature sources 0. from T1,T2 (factory default)

	1. from AI3,AI4
M86	Select the Specific Heat Value. Factory default is 'GB'. Under this setting, the flow meter will calculate the enthalpy of water based on the international standard. If the fluid is other than water, you should select option '1. Fixed Specific Heat', and enter the specific heat value of the fluid.
M87	Turn on or turn off the Energy totalizer.
M88	Select thermal energy totalizer multiplying factor. Factory default is '1'.
M89	1. Display the temperature difference 2. Window for entering the lowest temperature difference.
M8.	Heat meter is on 1. Inlet 2. Outlet Select the heat meter installation place.
M90	Display signal strengths S (one for upstream and one for downstream), and signal quality Q value. Signal strength is presented by 00.0 to 99.9, the bigger the value, the bigger the signal strength will be, and more reliable readings will be made. Q value is presented by 00 to 99, the bigger the better. It should at least be great than 50 for normal operations.
M91	Displays the Time Ratio between the Measured Total Transit Time and the Calculated time. If the pipe parameters are entered correctly and the transducers are properly installed, the ratio value should be in the range of 100±3%. Otherwise the entered parameters and the transducer installation should be checked.
M92	Displays the estimated fluid sound velocity. If this value has an obvious difference with the actual fluid sound speed, pipe parameters entered and the transducer installation should be checked again.
M93	Displays total transit time and delta time(transit time difference)
M94	Displays the Reynolds number and the pipe factor used by the flow rate measurement program. Pipe factor is calculated based on the ratio of the line-average velocity and the cross-section average velocity.
M95	(1) Display the positive and negative energy totalizers (2) Upon entering this window, the circular display function will be started automatically. The following windows will be displayed one by one, each window will stay for 8 seconds: M95>>M00>>M01>>M02>>M02>> M03>>M04>>M05>>M06>>M07>>M08>>M90>>M91>>M92>> M93>> M94>>M95. This function allows the user to visit all the important information without any manual action. To stop this function, simply press a key. Or switch to a window other than M95.
M96	This is not a window but a command for the thermal printer to advance 5 lines of paper.
M97	This is not a window but a command to print the pipe parameters. By default, the produced data will be directed to the internal serial bus (thermal printer). You can also direct those data to the serial communication port.
M98	This is not a window but a command to print the diagnostic information. By default, the produced data will be directed to the internal serial bus (thermal printer). You can also direct those data to the serial communication port.

M99	This is not a window but a command to copy the current display window. By default, the produced data will be directed to the internal serial bus (thermal printer). You can also direct those data to the serial communication port. By use of the window copying function, you can hardcopy very window displaying manually by switching windows, or you can obtain the window displaying data by communication.
M+0	Browse the 32 recorded instrument power-on and power-off date and time with the flow rate at the time of power on and off
M+1	Displays the total working time of the flow meter. When the backup battery is removed, the total working time will be reset to zero.
M+2	Displays the last power-off date and time
M+3	Displays the last power-off flow rate
M+4	Displays how many times of has been powered on and powered off.
M+5	A scientific calculator for the convenience of field working. All the values are in single accuracy. The calculator can be used while the flow meter is conducting flow measurement. Water density and PT100 temperature can also be found in this function.
M+6	Set fluid sound speed threshold Whenever the estimated sound speed (displayed in M92) exceeds this threshold, an alarms signal will be generated and can transmitted to BUZZER or OCT or RELAY. This function can used to produce an alarm or output when fluid material changes.
M+7	Displays total flow for this month(only for the time past)
M+8	Displays total flow for this year(only for the time past)
M+9	Display the not-working total time in seconds. The total failure timer will also include the time when power off, if the back-up battery is applied.
M.2	Entry to solidify the zero point. Password protected.
M.5	Setup the Q value threshold. If the present Q is below this threshold, flow rate will be set to 0. This function is useful when flow meter is installed in noisy environment or on airy pipes.
M.8	The maximum flow rates for today and this month.
M.9	Serial port tester with CMM command output for very second.
M-0	Entry to hardware adjusting windows only for the manufacturer
M-1	4-20mA output adjustment
M-2	4mA calibration for AI3 input
M-3	20mA calibration for AI3 input
M-4	4mA calibration for AI4 input
M-5	20mA calibration for AI4 input
M-6	4mA calibration for AI5 input
M-7	20mA calibration for AI5 input
M-8	Lower Temperature Zero setup for the PT100
M-9	Higher Temperature Zero setup for the PT100
M-A	Temperature Calibration at 50℃
M-B	Temperature Calibration at 84.5℃

Note: 1. Windows in Red are new to our older version of flow meter
2. Windows in blue are energy related windows
3. The term totalizer is also called accumulator

4. How To

4.1 How to judge if the instrument works properly

Enter into M08, if ‘R’ is displayed on the screen, the instrument is working properly,

If 'E' is displayed, the current loop output is over-ranged. Increasing the range setting in M57 will make the 'E' letter disappear. If you do not use current loop output, you may ignore this error.

If 'Q' is displayed, the frequency output is over-ranged. Increasing the range setting in M69 will make the 'Q' letter disappear. If you do not use frequency output, you may ignore this error.

If an ‘H’ flashes on that place, there could be poor signal received. Please refer to the chapters on diagnosis.

If 'G' is displayed, the flow meter is adjusting system gain. This is normal as far as it does not last long time.

If an ‘I’ is displayed, it means that there is no signal detected.

If 'J' is displayed, there is hardware problem. Turn off the power, then, turn on the power again. If the problem remains, refer to Chapter 5 for diagnosis details.

4.2 How to judge the liquid flowing direction

(1) Make sure that the instrument works properly
(2) Check the flow rate for the indication. If the displayed value is POSITIVE, the direction of the flow will be from the A transducers to the B transducers; if the displayed value is NEGATIVE, the direction will be from the B transducers to the A transducers;

4.3 How to change between units systems

Use menu window M30 for the selection of unit system in English or Metric system.

4.4 How to select a required flow rate unit

Use menu window M31 to select the flow unit first and then the timing unit.

4.5 How to use the totalizer multiplier

Use window M33 to select a proper totalizer. Make sure that the totalizer pulse is appropriately speeded. It should not be too fast and neither too slow. A speed of producing a pulse in several seconds or minutes is preferable.

If the totalizer multiplier is too small, there can be a loss of accumulation pulse because the output device can output only one pulse in a measurement period (500milliseconds)

If the totalizer multiplier is too large, the output pulse will be too fewer for the devices that are connected with the instrument for a quicker response.

4.6 How to open or shut the totalizers

Use M34, M35 and M36 to turn on or turn off the POS, NEG, or NET totalizer respectively.

4.7 How to reset the totalizers

Use M37 to reset the proper totalizer.

4.8 How to restore the flow meter with default setups

Use M37, when the ‘selection’ message is displayed. Press the dot key first and the message ‘Master Erase’ will display, then press the backspace key ◄

The master erase step will erase all the parameters entered by the user and setup the instrument with default values except “instrument factor” and “network identification number” parameter

4.9 How to use the damper

The damper acts as a filter for a stable reading. If ‘0’ is entered in window M40, that means there is no damping. A bigger number brings a more stable effect. But bigger damper numbers will prevent the instrument from acting quickly.

Numbers 0 to 30 are commonly used for the damper value. Default value is 10 seconds.

4.10 How to use the zero-cutoff function

The number displayed in window M41 is called the lower flow rate cut-off value. The flow meter will replace these flow rate values that are absolutely less than the low-cutoff value with ‘0’. This means the flow meter will avoid any invalid accumulation when the actual flow is below the zero-cutoff value. Generally the default value is 0.03m/s

The low-cutoff value does not affect the flow measurement when the actual flow is absolutely greater than the low-cutoff value.

4.11 How to setup a zero point

There exists a ‘Zero Point’ with certain installation which means the flow meter will display a non-zero value when the flow is absolutely stopped. In this case, setting a zero point with the function in window M42 will bring a more accurate measurement result.

Make sure that there is no liquid running inside the pipe, and then run the function in window M42 by pressing the ENT key.

4.12 How to get a scale factor for calibration

A scale factor is the ratio between the ‘actual flow rate’ and the indicated value by the flow meter.
It can be determined by calibration with standard flow calibration equipment. You may change the scale factor in menu window M45.
The scale factor can be determined by calibration with flow calibration equipment.

4.13 How to use the system locker

The system locker provides a means of preventing inadvertent configuration changes or totalizer resets.

When the system is locked, menu window browsing can be done without affecting any change, but any modifications are prohibited.

The system can be locked without a password or with a 1 to 4 digit password. With a no-password locking, directly press the ENT key in M47

If the password is forgotten, please contact the factory.

4.14 How to use 4-20mA current loop output

The accuracy of the current loop output is better than 0.1%. It can be configured to different mode,

such as 4-20mA mode, 0-20mA etc. Mode selection can be made in menu M55. Refer to the next chapter for details on M55.

In order to use the 4-20mA output function, you need not only select the mode to be 4-20mA in M55, but also set the flow rate values which correspond to the minimum current (4mA) and the maximum current (20mA). Enter the two values in M56 and M57.

Example A: flow rate range is 0-500m^3/h. Just enter 0 in M56 and 500 in M57.

Example B: flow rate range is -500-0-1000m^3/h. If flow direction is not an issue for you, you may select 20-4-20mA mode in M55. Then, enter 500 in M56 and 1000 in M57. If flow direction is an issue, you may select 0-4-20mA mode in M55. This means that the current loop will output 0-4mA when flow rate is negative and 4-20mA when flow rate is positive. Enter -500 in M56 and 1000 in M57.

You may need to calibrate and test the current loop output before using it. Just go to menu M58 and do the following:

First, connect an ammeter to the current loop output.

Press MENU 5 8, then ENT to enter into menu M58.

Use ▲/+ and ▼/- to display "0mA", "4mA", "8mA", "16mA", "20mA" orderly, record the corresponding reading on the ammeter. Calculate the differences between the readings and the selected ones. For instance, when 4mA is selected, the actual output current shown on the ammeter is 4.01mA. Then, the difference is 0.01mA.

If the differences are not within tolerance, calibrate the current loop

The present current loop output is displayed in Window M59. It changes along with flow rate change.

4.15 How to use the Frequency Output

There is a Frequency Output in all TUF-2000 series flow meters. This frequency output signal, which represents the flow rate, is intended to connect with other instruments.

The Frequency Output is totally user-configurable. Generally, four parameters should be configured for the setups.

Enter the lower flow rate value in window M68 and the higher flow rate value in window M69.

Enter the frequency range in window M67.

For example, assume that the flow rate varies in a range 0m^3/h to 3000m^3/h, and an output signal is at a maximum frequency of 1000Hz, the minimum of 200Hz is going to be required for other

instrumentation. The user should enter 0 in M68 and 3000 in M69, and enter 200 and 1000 in window M67.

Please note that the user has to make the selection with OCT setups in window M78.

4.16 How to use the Totalizer Pulse Output

The totalizer output will produce a pulse output with every unit flow of the totalizer.

The totalizer pulse output can only be realized by mapping the pulse output to the OCT or BUZZER hardware devices.

For example, assume that the POS totalizer pulse output is needed, and every pulse should represent 0.1cubic meter of liquid flow; the pulse output will be mapped to the internal Buzzer, so that with every 0.1 cubic meter of flow the BUZZER will beep for a while.

The following setups should be taken / performed:
(1) Select the unit Cubic Meter under window M32.
(2) Select the Multiplier as '2. X0.1' under window M33.
(3) Select the output option '9. POS INT Pulse' under window M77. (INT stands for totalized)

4.17 How to produce an alarm signal

There are 2 types of hardware alarm signals that are available with this instrument. One is the Buzzer, and the other is the OCT output.

Both for the Buzzer and OCT output the triggering sources of the event include the following:
(1) There is no receiving signal
(2) There is poor signal received.
(3) The flow meter is not in normal measurement modes.
(4) Reverse flow.
(5) Overflow occurs at the analogue output by 100% or more
(6) Overflow occurs at the frequency output by 120% or more.
(7) The flow rate is out of the specified range which is configured in windows M73 and M74 for Alarm #1, and in windows M75 and M76 for Alarm #2.

Example A: assume we need the Buzzer to start beeping when the flow meter is not ready in normal measurement. Switch to M77, select item "2. Abnormal Measurement State"

Example B: assume we need the Buzzer to start beeping when the flow rate is less than 300 m^3/h and greater than 1000m^3/h. The following setup steps would be recommended:

(1) Enter flow rate lower limit 300 in M73 for #1 alarm,

(2) Enter flow rate upper limit 1000 in M74 for #1 alarm,
(3) Select item '6. Alarm #1' in M77.

Example C: assume we need the OCT output to activate when flow rate exceeds 100~500m^3/h and the relay output to activate when flow rate exceeds 600~1000m3/h. The following setup steps would be recommended:

(1) Enter flow rate lower limit 100 in M73
(2) Enter flow rate upper limit 500 in M74
(3) Enter flow rate lower limit 600 in M75
(4) Enter flow rate lower limit 1000 in M76
(5) Select item '6. Alarm #1' in M78
(6) Select item '6. Alarm #1' in M79.

4.18 How to use the built-in Buzzer

The built-in buzzer is user-configurable. It can be used as an alarm. Use M77 for setups.

4.19 How to use the OCT output

The OCT output is user-configurable, which can be performed by selecting the proper input source such as pulse output. Use M78 for the setups.
Please make sure that the Frequency Output shares the OCT.

The OCT output shares pins with the RS-232C interface, and the terminal is at Pin 1 and 8

4.20 How to modify the built-in calendar

No modification on the built-in calendar will be needed in most cases. The calendar runs on insignificant amount of power supply. Modification will be required only in such cases as when the battery is totally consumed, or when the changing of the battery takes a long time.

Press the ENT key under M60 for Modification. Use the dot key to skip over these digits that need no modification.

4.21 How to view the Date Totalizers

Use M82 to view the date totalizers that are comprised of a daily totalizer, a monthly totalizer and a yearly totalizer.

4.22 How to use the Working Timer

Use the working timer to check the time that has passed with a certain kind of operation. For example, use it as a timer to show how long a fully-charged battery will last.

Under M72, press ENT key and then select YES to reset the timer.

4.23 How to use the manual totalizer

Use M38 for the manual totalizer. Press ENT key to start and stop the totalizer.

4.24 How to know how long the battery will last

Use M07 to check how long the battery will last. Also please refer to §.2.1

4.25 How to check the ESN and other minor details

Every set of the CC-120A-TUF flow meter utilizes a unique ESN to identify the meter. The ESN is an 8-digit number that provides the information of version and manufacturing date.

The user can also employ the ESN for instrumentation management.

The ESN is displayed in window M61.

Other details about the instrument are the total working hours displayed in window M+1, and the total power-on times displayed in window M+4.

4.26 How to use the data logger for scheduled output

Use menu window 51 to setup the time of scheduled output, including start time, time interval and how many times of output. Then use menu window 50 to turn on data logger and select the items you want to output.

4.27 How to output analogue voltage signal

Parallel a 250Ω resistance to the terminal of the Current loop output (No.21, 22), then you can change the 4-20mA output to analogue voltage output.

4.28 How to adjust the LCD display

You may use menu window 70 to setup the LCD display backlight and menu window 71to adjust contrast it.

4.29 How to use RS232/RS485?

Use menu window 62 to set up RS232/RS485. All the devices connected with flow meter should have matched serial configuration.
The following parameters can be configured: Baud rate (300 to 19200 bps), parity, data bits (always is 8), stop bits (1).

4.30 How to use automatic amending function for offline compensation

Use menu window 83 turn on or turn off this function. When the function is enabled, the flow meter will estimate the average flow uncounted (or 'lost') during the offline session and add the result to the totalizer.
This function is not recommended. The user should manage to avoid the offline time to keep precision of the measurement result.

4.31 How to use batch controller

Please do the following to use the batch controller:
1) Go to menu window 80 to select the trig signal.
2) Go to menu window 78 (OCT output) or 79 (relay output), select "8 Batch Control".
3) Use menu window 81 to set the flow batch value (dose).

4.32 How to adjust the analogue output

We have adjusted every set of meter before delivery. Unless you find the current indicated in menu 58 is different with the actual current output, please do not do this operation.
Press keys MENU ▼/- 0, use the password "4213068" to enter the window. Notice: the window will close after power off and the password will become invalid then.
Press keys MENU ▼/- 1, to adjust the 4mA current output: use precision ammeter to measure the output current, at the same time, use ▲/+ ▼/- to adjust the digital on the flow meter until the ammeter indicate 4.00. Then press ENT to enter the window of adjusting the 20mA output.
When finished adjusting, you have to use menu window 26 to store the result into the flash memory, so that it will be solidified and will not be lost even the reserve battery removed.

4.33 How to solidify the parameters

There are three kinds of parameters for the new generation TUF/TUC-2000:

1) Current parameters, the parameters are stored in the RAM. They will be lost when one cut the power or remove the reserve battery.

2) Solidified parameters, you may use menu window 26 to store the parameters in the Flash memory and they will not be lost even power off. This menu window is also a switch for the parameters in flash memory to be loaded when power is turned on. The default option is that the parameters will be loaded. So if the parameters are very stable, you may need this option.

3) User frequently-used parameters, you can use menu window 27 to store or restore from the internal Flash memory, as many as 9 different pipe parameter configurations.

4.34 How to enter the parameters of user-type-transducer

If a user-type-transducer is selected in menu window 23, you need proceed to enter additional 4 user-type-wedge parameters that describe the user transducers.

If the PI-type transducer is selected, you need enter additional 4 PI-type transducer parameters that describe the PI-type transducers.

4.35 How to use the circular display function

When entering menu window 95, the circular display function will be started automatically. The following windows will be displayed one by one, each window will stay for 8 seconds:
M95>>M00>>M01>>M02>>M02>>
M03>>M04>>M05>>M06>>M07>>M08>>M90>>M91>>M92>> M93>> M94>>M95. This function allows the user to visit all the important information without any manual action.

To stop this function, simply press a key. Or switch to a window other than M95.

4.36 How to enter into the linearity correcting? How to enter into the data?

When the product leaved the factory, the function is closed.

The menu can realize almost 12 parts linearity correcting. The user can choose from two points to twelve points to execute the linearity correcting according to user actual condition.

In order to explain the usage method of the menu, we suppose that we get the following table data through calibration the meter.

Reference standard equipment flow (m^3/h)	Instrumented show flow (m^3/h)	Correction coefficient (standard / show value)
1.02	0.0998	1.02
5.11	5.505	0.93
10.34	10.85	0.95
20.45	19.78	1.03
50.56	51.23	0.99

In order to revised the flow exceed the scope of the above table, without mutations of correction factor, we add two points on the basis of the above five points, (0 m^3/h, 1.0) and (100000 m^3/h, 1.0). (0 m^3/h, 1.0) is called the minimum flow of the amendment point, this set of data is used to facilitate to generated a appropriate correction factor when Instrumented show flow under 1.02 m^3/h. (100000 m^3/h, 1.0) is called the maximum flow of the amendment point, this set of data is used to facilitate to generated a appropriate correction factor when Instrumented show flow above 50.56 m^3/h. So that we get the following data sets from small to large.

(0 , 1.02)
(0.0998 , 1.02)
(5.505 , 0.93)
(10.85 , 0.95)
(19.78 , 1.03)
(51.23 , 0.99)
(100000 , 0.99)

The total is seven sets of data. The next step is to put seven sets of data entered into the Instrument. Pay attention to the input order in accordance with from small to large.

To enter the menu M48, then input the data set number “7”, to be followed in the above seven sets of data, we revised the setup of a multi-segment linearity correcting.

If you need to cancel linearity correcting, simply enter “0” in the menu M48.

Decommissioned linearity correcting, you just need to enter in the menu M48 data points (in this case, is “7”).

Noted: before the calibration of the instrument, you must first close the linearity correcting function. If under the condition that the linearity correcting function has not closed, the calibration data sets arising from the amendment must be dealing with the reverse curve of the data following the original amendment, then input to the Instrument. Reverse amendment is very complicated, and should be avoided.

4.37 How to save / restore frequently-used pipe parameters

You can use menu window 27 to store or restore from the internal Flash memory, as many as 9 different pipe parameter configurations.

5. Troubleshooting

5.1 Power-on Error Displays and Counter-Measures

The CC-120A-TUF ultrasonic flow meter provides an automatic power-on diagnosis for the hardware

problems. When any message (with the power on) in the following table displays, counter-measures should be taken.

Error message	Causes	Counter-measures
ROM Testing Error Segment Test Error	Problem with the software	(1)Power on again (2)Contact with factory
Stored Data Error	The parameters entered by the user lose integration.	When this message displays, the user should press ENT key, and all the configuration will be restored to the default state.
Timer Slow Error Timer Fast Error	Problem with the timer-keeper or the crystal oscillator.	(1)Power on again (2)Contact with factory
Date Time Error	Number errors with the calendar	Initialize the calendar by menu window M61
Reboot repetitively	Hardware problems	Contact the factory

5.2 Error Code and Counter-Measures

The CC-120A-TUF ultrasonic flow meter will show Error Code in the lower right corner with a single letter like I, R etc. on menu windows M00, M01, M02, M03, M90 and M08. When any abnormal Error Code shows, counter-measures should be taken.

Error code	Correspondent Message displayed on M08	Causes	Counter-measures
R	System Normal	No error	
I	Detect No Signal	(1)No Signals detected (2)Transducers installed improperly (3)Too much fouling (4)Pipe liners are too thick. (5)Transducer cords are not properly connected	(1)Relocate measuring location (2)Clean the spot (3)Check the cords
J	Hardware Error	Hardware problem	Contact the factory
H	PoorSig Detected	(1)Poor signal detected (2)Transducers installed improperly (3)Too much fouling (4)The pipe liners are too thick. (5)Problem with transducers cords	(1)Relocate measuring place (2)Clean the spot (3)Check the cords (4)Check the coupler
Q	Frequ Output Over	The actual frequency for the Frequency Output is out of the range set by the user	Check the value entered at M66, M67,M68 and M69, and try to enter a

			larger value on M69
F	System RAM Error Date Time Error CPU or IRQ Error ROM Parity Error	(1) Temporary problems with RAM, RTC (2) Permanent problems with hardware	(1) power on again (2) contact factory
G	Adjusting Gain	Instrument is in the progress of adjusting the gain for the signal, and the number indicates the progressive steps	
K	Empty pipe	No liquid inside pipe Setup error on M29	Relocate where the pipe is full of liquid Enter 0 on M29

5.3 Other Problems and Solutions

1. When the actual flow inside the pipe is not standstill, but the instrument displays 0.0000 for the flow rate, and ‘R’ displaying signal strength and the signal quality Q (value) has a satisfactory value?
The problems are likely caused by the user who has used the ‘Set Zero’ function on this non-standstill flowing pipe. To solve this problem, use the ‘Reset Zero’ function on menu window M43.

2. The displayed flow rate is much lower or much higher than the actual flow rate in the pipe under normal working conditions.
(1) There is probably an offset value wrongly entered by the user in M44. Enter ‘0’ in M44.
(2) Problem with transducer installation.
(3) There is a ‘Zero Point’. Try to ‘zero’ the instrument by using M42 and make sure that the flow inside the pipe should be standstill.